Single lever bath mixer M32_MT000130

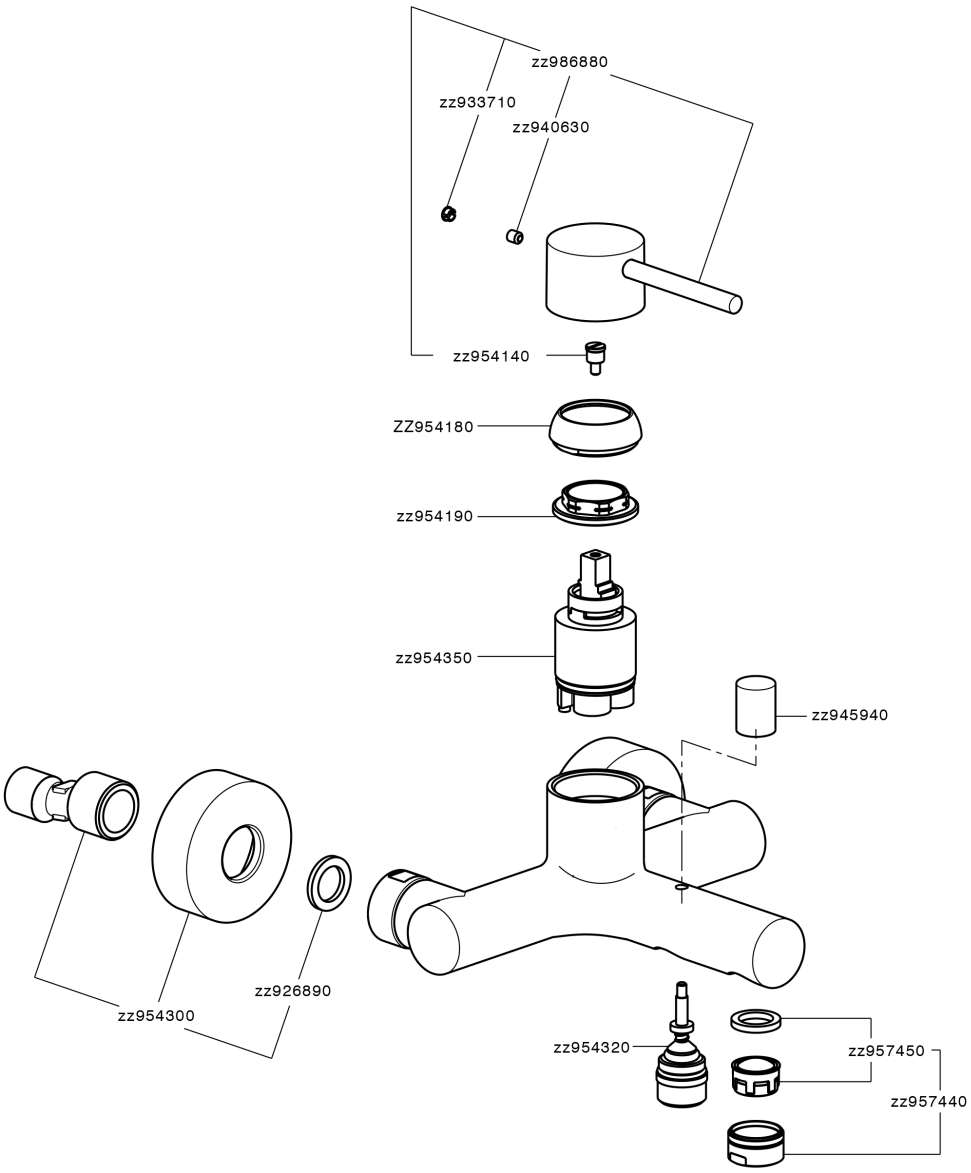

MT000130

https://en.huberitalia.com/single-lever-bath-mixer-m32-mt000130

2026-05-15

© 2021 Huber. Via Brughiere, 50. 28017 - San Maurizio (NO) - Italy
Mail: huber@hubertitalia.com, Telefono: (+39) 0322 967783, P.Iva IT02422800033.