Soap dispenser COMMUNITY_LC190610

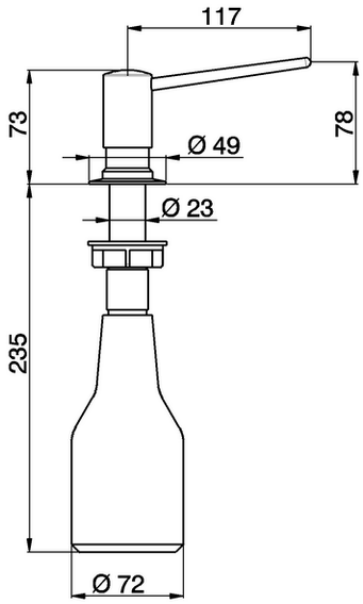

LC190610

https://en.huberitalia.com/soap-dispenser-community-lc190610

2026-05-15