Concealed 3-outlet diverter SUITE_SU000270

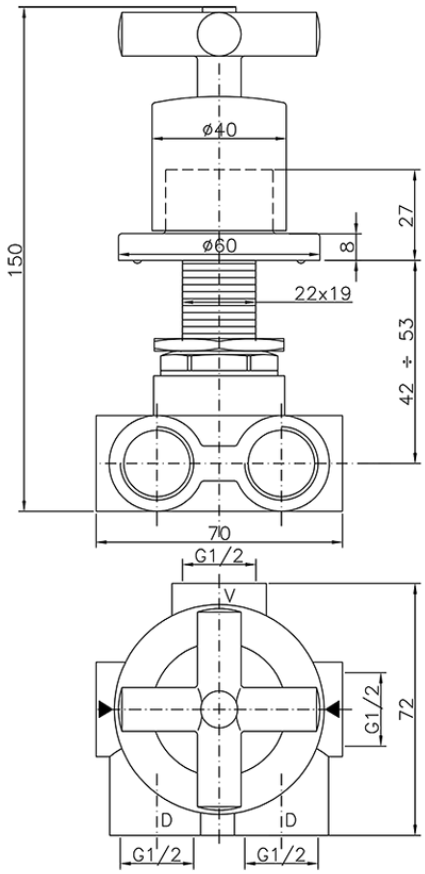

SU000270

https://en.huberitalia.com/concealed-3-outlet-diverter-suite-su000270

2026-05-15

© 2021 Huber. Via Brughiere, 50. 28017 - San Maurizio (NO) - Italy
Mail: huber@hubertitalia.com, Telefono: (+39) 0322 967783, P.Iva IT02422800033.