Huber
TEL. (+39) 0322 967783
MAIL. huber@huberitalia.com

Single lever bath mixer, with shower set KIRUNA

MODEL **KR000120**

Single lever bath mixer, with shower set,wall mounted adjustable handshower bracket,D.68 mm ABS 5 sprays handshower,Brass 150 cm flexible hose

AVAILABLE FINISHINGS

21 21 Chrome

CHARACTERISTICS

Cartridge Spare Parts **ZZ95273000**

40 mm Cartridge

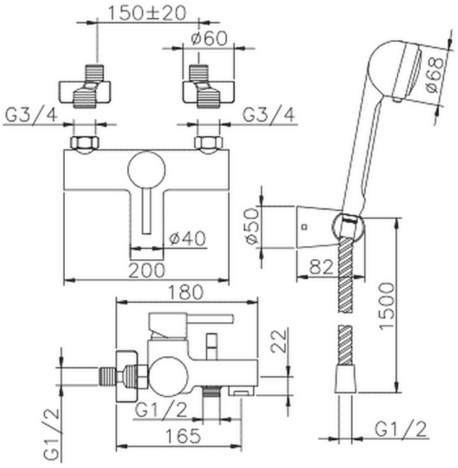

2024-05-06

© 2021 Huber. Via Brughiere, 50. 28017 - San Maurizio (NO) - Italy
Mail: huber@hubertitalia.com, Telefono: (+39) 0322 967783, P.Iva IT02422800033.