Single lever bath mixer KIRUNA

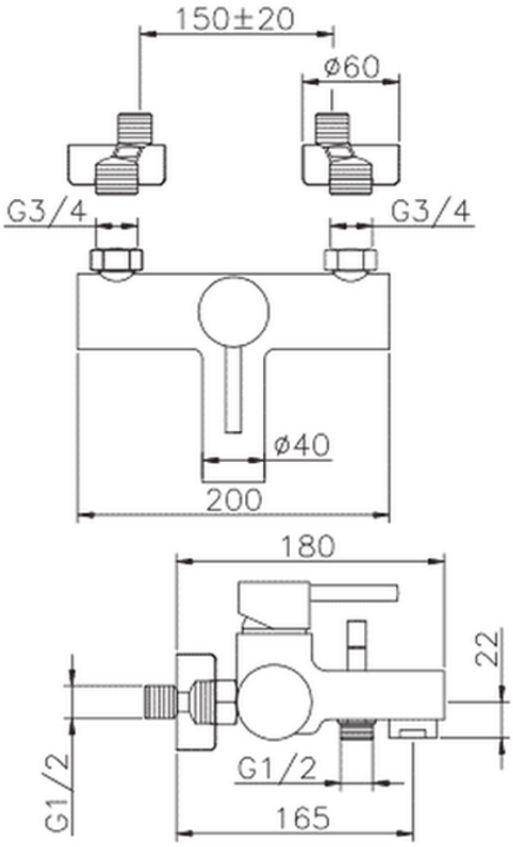

KR000130

https://en.huberitalia.com/single-lever-bath-mixer-kirunakr000130

2024-05-07