Single lever washbasin mixer EnergySave SATURNO_SN000515

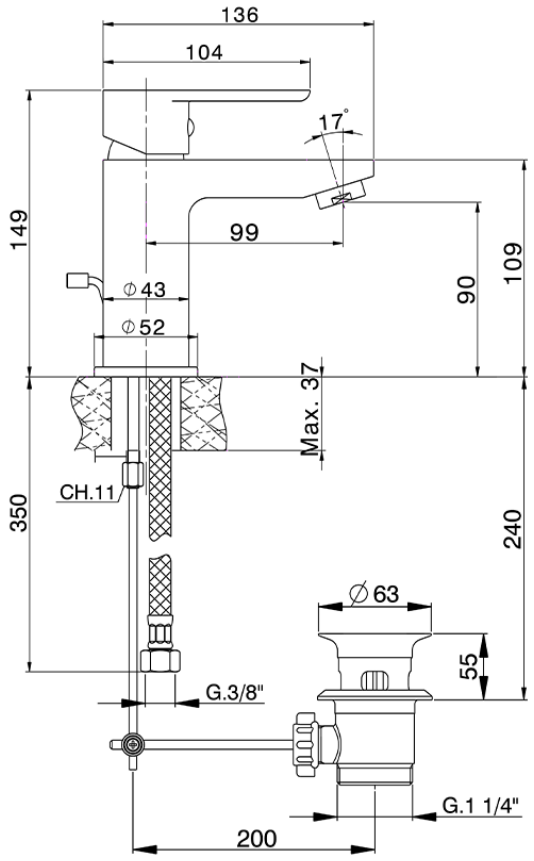

SN000515 https://en.huberitalia.com/single-lever-washbasin-mixer-energysave-saturno-sn000515

2026-06-06