Huber
TEL. (+39) 0322 967783
MAIL. huber@huberitalia.com

Arm and Shower Set with wall elbow integrated SHOWER_SS0K0020

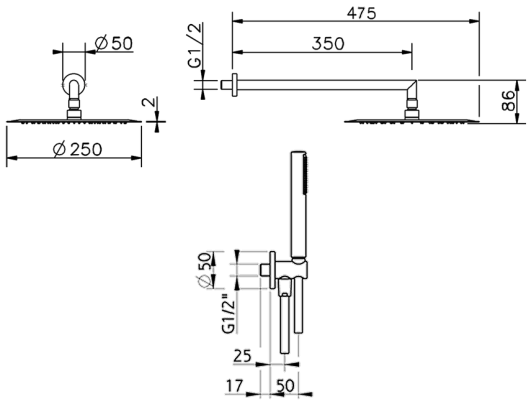

MODEL **SS0K0020**

Arm and Shower Set with wall elbow integrated,350 mm shower arm,250 mm round showerhead 2 mm thick INOX,ABS D.26 mm minimalistic one spray handshower,1/2" wall elbow,150 cm smooth SILVERFLEX Flexible Hose

AVAILABLE FINISHINGS

21 21 Chrome

CHARACTERISTICS

2026-04-06