Shower arm with showerhead SHOWER_SS013700

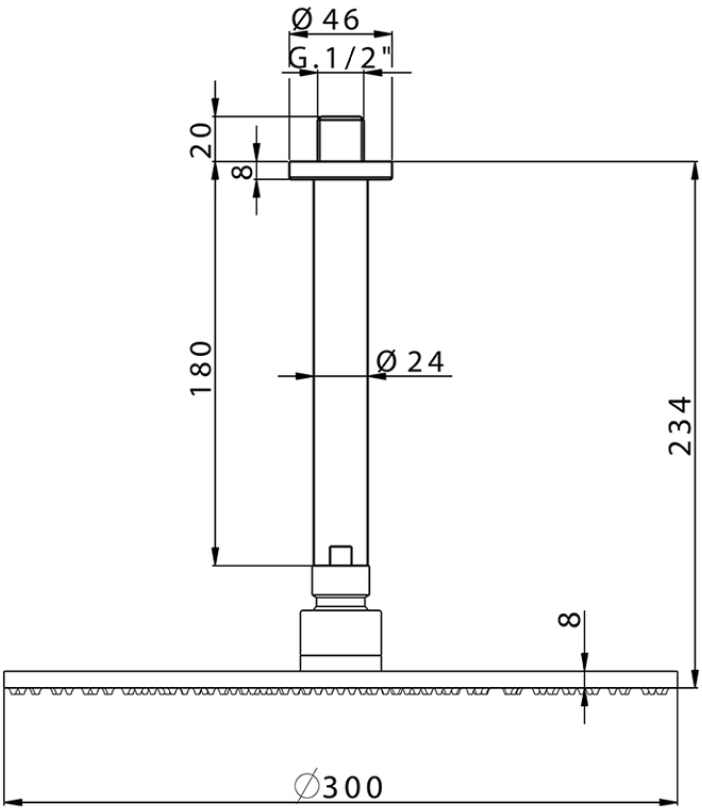

SS013700

https://en.huberitalia.com/shower-arm-with-showerhead-shower-ss013700

2026-04-30