Huber
TEL. (+39) 0322 967783
MAIL. huber@huberitalia.com

Shower arm with showerhead SHOWER_SS013700

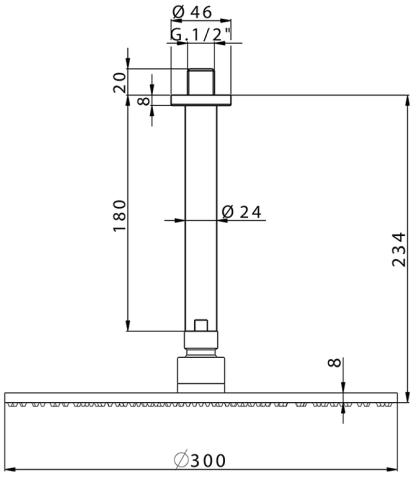

MODEL **SS013700**

Shower arm with showerhead,300 mm round showerhead 8 mm thick BRASS

AVAILABLE FINISHINGS

- **21** 21 Chrome
- **2B** 2B Polished Nickel
- **2F** 2F Brushed Nickel
- **2P** 2P Rose Gold
- **2Q** 2Q Black Titanium
- **40** 40 Matt Black
- **4Q** 4Q Matt White

CHARACTERISTICS

2026-04-30

© 2021 Huber. Via Brughiere, 50. 28017 - San Maurizio (NO) - Italy
Mail: huber@hubertitalia.com, Telefono: (+39) 0322 967783, P.Iva IT02422800033.