Huber
TEL. (+39) 0322 967783
MAIL. huber@huberitalia.com

2-Hole deck mounted single lever bath mixer NUOVA KIRUNA_K2001250

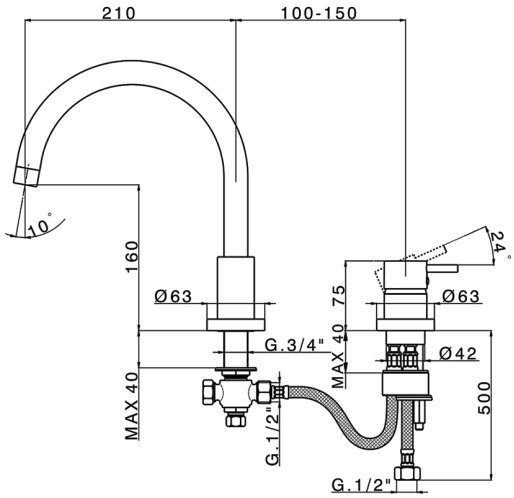

MODEL **K2001250**

2-Hole deck mounted single lever bath mixer

AVAILABLE FINISHINGS

21 21 Chrome

26 26 Old Copper

2F 2F Brushed Nickel

2W 2W Brushed Gold

40 40 Matt Black

4Q 4Q Matt White

CHARACTERISTICS

Cartridge Spare Parts **ZZ93196000**

38 mm Cartridge

2026-05-15

© 2021 Huber. Via Brughiere, 50. 28017 - San Maurizio (NO) - Italy
Mail: huber@hubertitalia.com, Telefono: (+39) 0322 967783, P.Iva IT02422800033.