Huber
TEL. (+39) 0322 967783
MAIL. huber@huberitalia.com

Exposed part for individual Push&Shower PUSH&SHOWER_PS0G6220

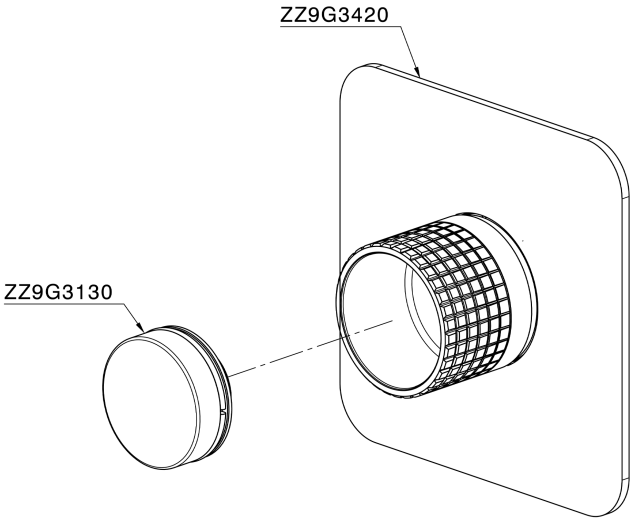

PS0G6220 https://en.huberitalia.com/exposed-part-for-individual-pushshower-pushshower-ps0g6220

2026-10-29

© 2021 Huber. Via Brughiere, 50. 28017 - San Maurizio (NO) - Italy
Mail: huber@hubertitalia.com, Telefono: (+39) 0322 967783, P.Iva IT02422800033.