CombiShower with Diverter COLUMNS_SSQ82022

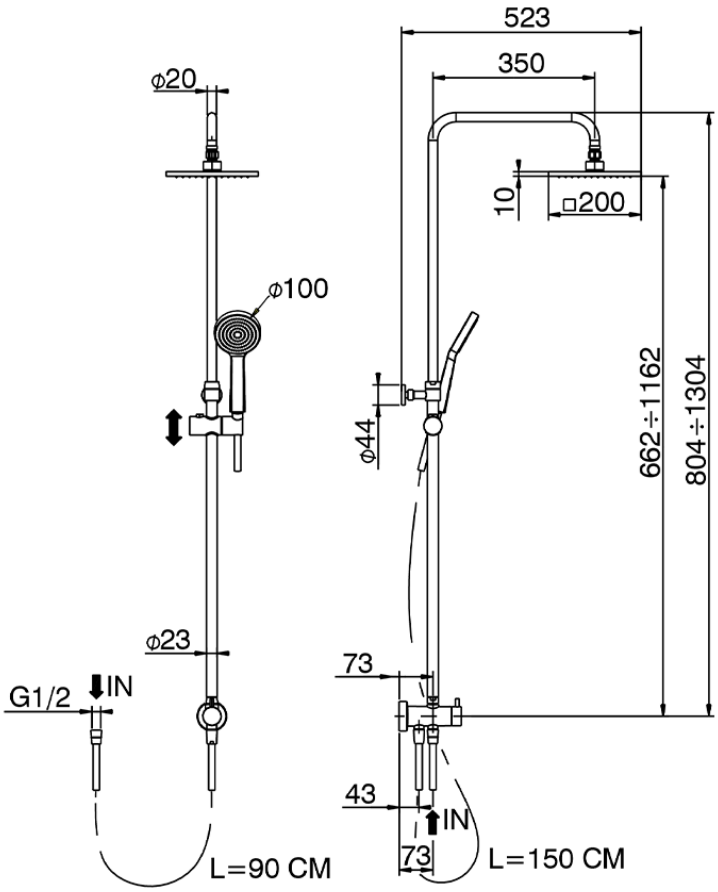

SSQ82022

https://en.huberitalia.com/combishower-with-diverter-columns-ssq82022

2024-10-29