Shower arm with showerhead SHOWER_SS013630

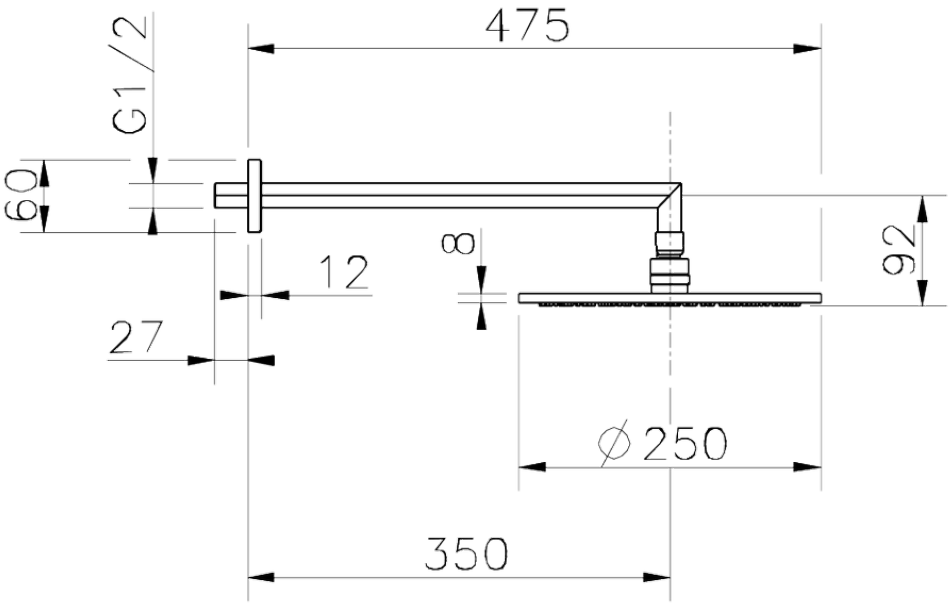

SS013630

https://en.huberitalia.com/shower-arm-with-showerhead-shower-ss013630

2026-06-09

© 2021 Huber. Via Brughiere, 50. 28017 - San Maurizio (NO) - Italy
Mail: huber@hubertitalia.com, Telefono: (+39) 0322 967783, P.Iva IT02422800033.