Huber
TEL. (+39) 0322 967783
MAIL. huber@huberitalia.com

Single lever washbasin mixer " large " EnergySave H2_H2000505

MODEL **H2000505**

Single lever washbasin mixer " large " EnergySave,without automatic pop-up waste,G.3/8" stainless steel flexible hoses

AVAILABLE FINISHINGS

21 21 Chrome

CHARACTERISTICS

Cartridge Spare Parts **ZZ96800000**

35 mm Cartridge

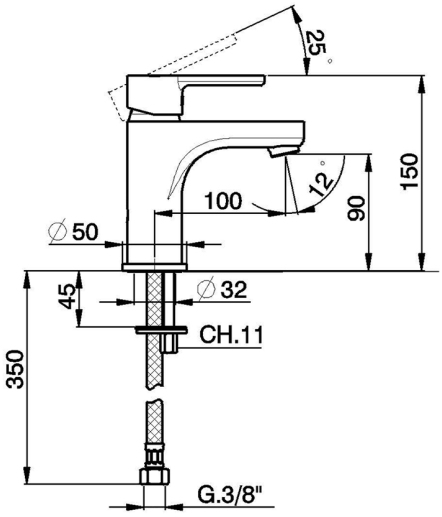

DeviaStop

The Huber Devia Stop technology allows to adjust the water flow and to direct it to the selected output point (overhead soaker, hand shower, etc).

EnergySave

Thanks to the EnergySave device, only cold water will be drawn if the lever is operated in the central position, so that the water heater will not be engaged and no hot water wasted, leading to considerable savings in energy and costs. The temperature can be adjusted by rotating the lever to the left, until the desired temperature is reached.

2026-01-13

© 2021 Huber. Via Brughiere, 50. 28017 - San Maurizio (NO) - Italy
Mail: huber@hubertitalia.com, Telefono: (+39) 0322 967783, P.Iva IT02422800033.