770x470 mm Chromotherapy Ceiling showerhead ZEN_ZS1C0150

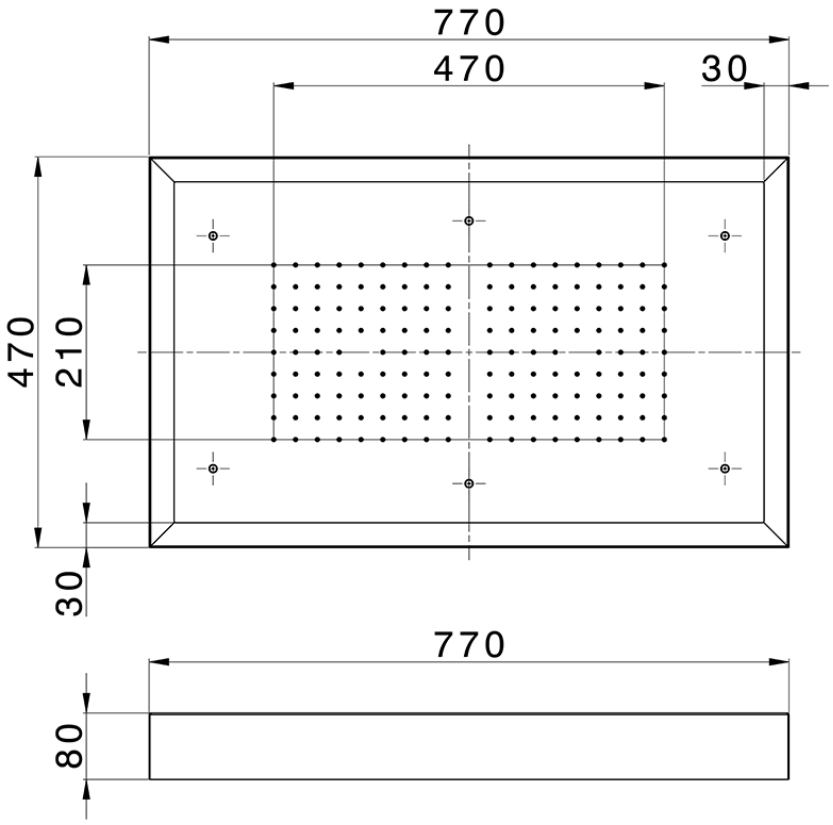

ZS1C0150 https://en.huberitalia.com/770x470-mm-chromotherapy-ceiling-showerhead-zen-zs1c0150

2026-01-12

© 2021 Huber. Via Brughiere, 50. 28017 - San Maurizio (NO) - Italy
Mail: huber@hubertitalia.com, Telefono: (+39) 0322 967783, P.Iva IT02422800033.