Single lever bidet mixer HARLOCK_HC000554

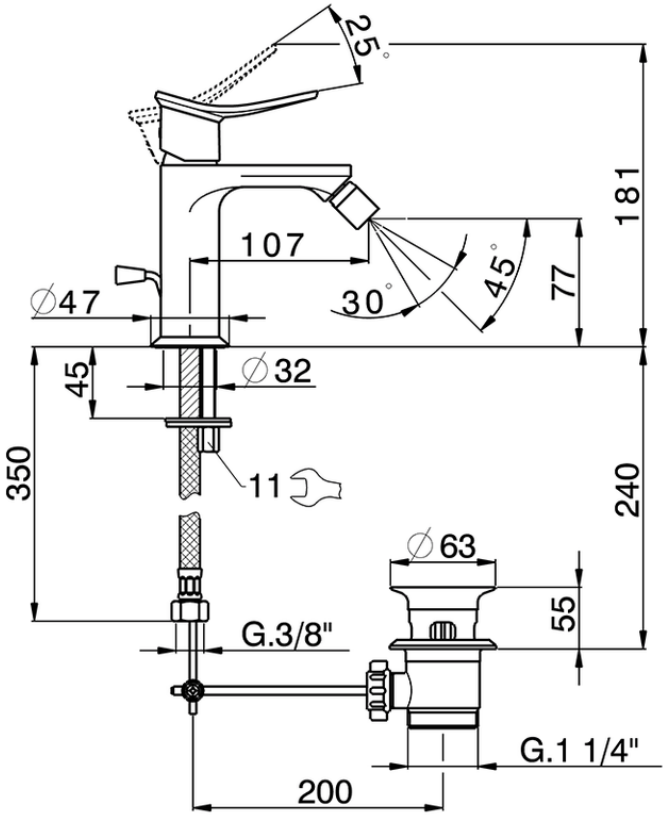

HC000554

https://en.huberitalia.com/single-lever-bidet-mixer-harlock-hc000554

2026-04-05