3-fonctions single lever shower panel COLUMNS_ZS105050

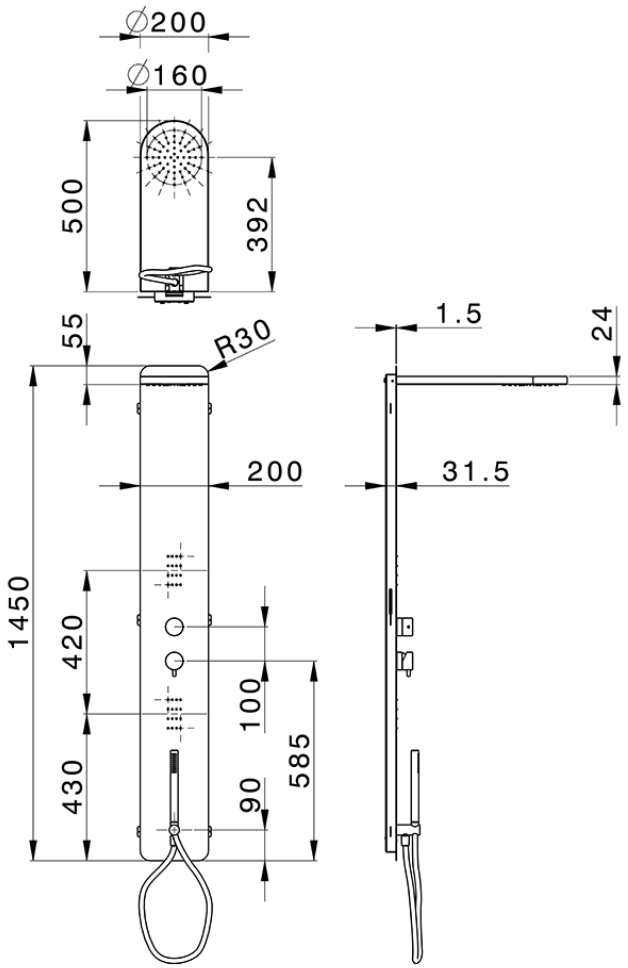

ZS105050 https://en.huberitalia.com/3-fonctions-single-lever-shower-panel-columns-zs105050

2026-06-26