3-fonctions single lever shower panel COLUMNS_ZS105040

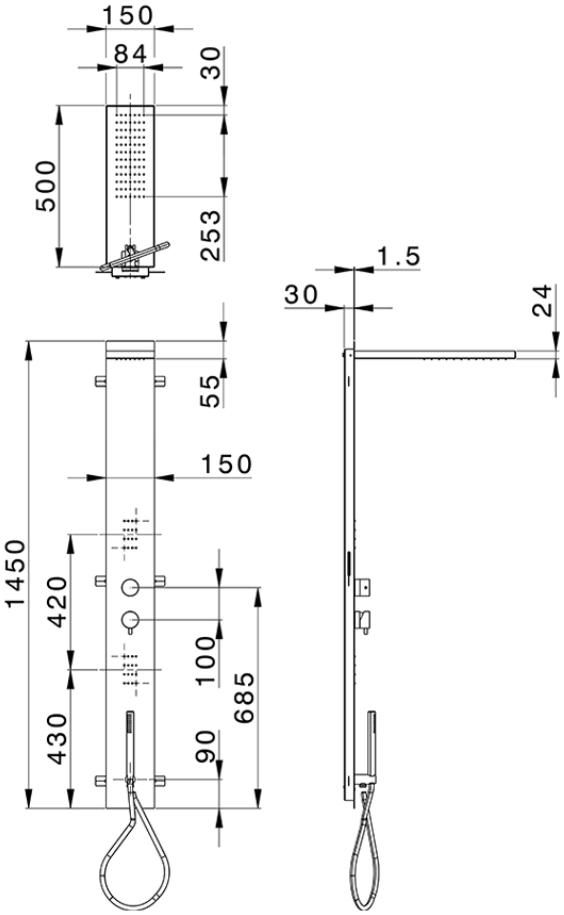

ZS105040 https://en.huberitalia.com/3-fonctions-single-lever-shower-panel-columns-zs105040

2026-04-05

© 2021 Huber. Via Brughiere, 50. 28017 - San Maurizio (NO) - Italy
Mail: huber@hubertitalia.com, Telefono: (+39) 0322 967783, P.Iva IT02422800033.