Thermostatic bath mixer, with shower set LEVITY_LYD21010

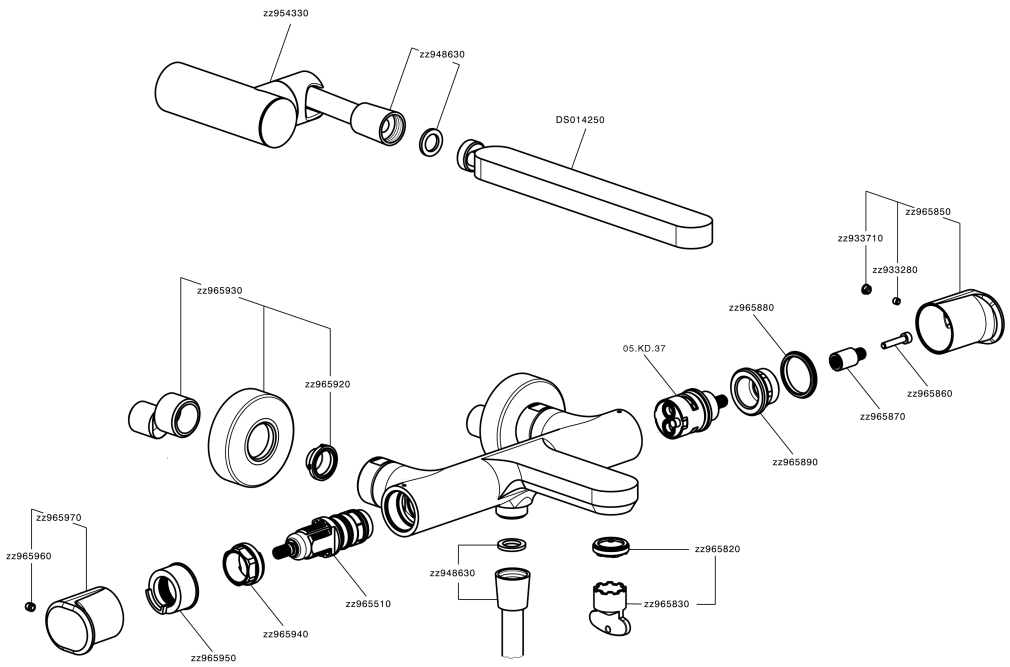

LYD21010 https://en.huberitalia.com/thermostatic-bath-mixer-with-shower-set-levity-lyd21010

2026-06-06

© 2021 Huber. Via Brughiere, 50. 28017 - San Maurizio (NO) - Italy
Mail: huber@hubertitalia.com, Telefono: (+39) 0322 967783, P.Iva IT02422800033.