# 2-function Thermostatic shower set CHRONOS_CRC78030

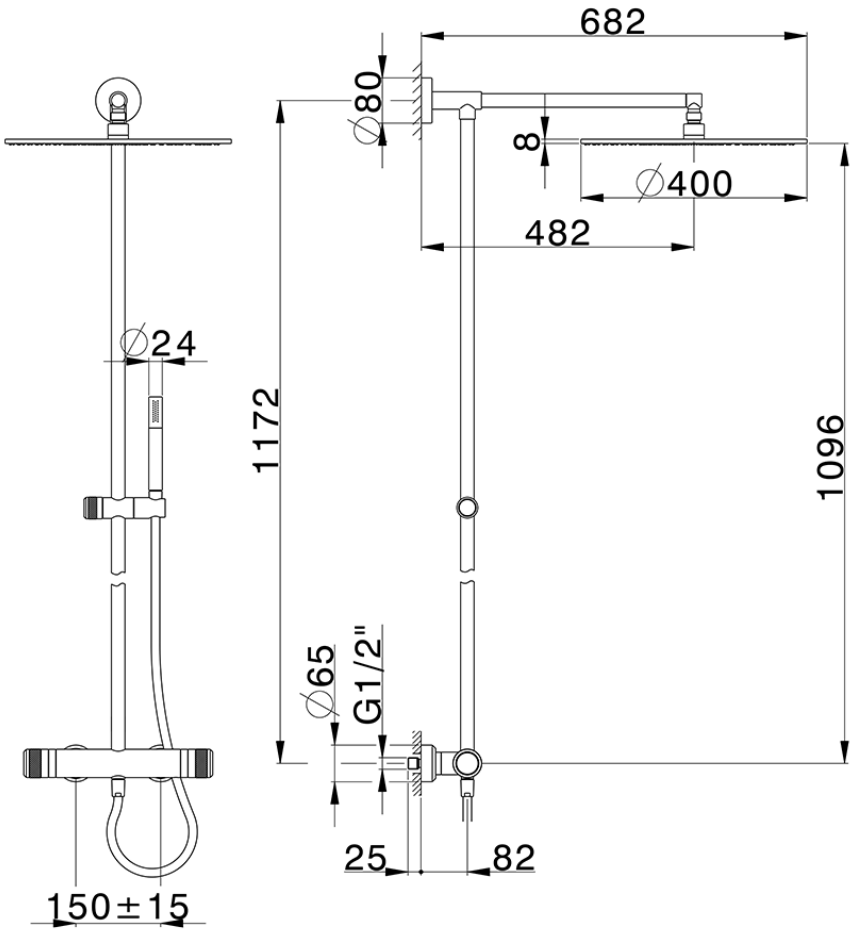


CRC78030 https://en.huberitalia.com/2-function-thermostatic-shower-set-chronos-crc78030

2026-04-29

© 2021 Huber. Via Brughiere, 50. 28017 - San Maurizio (NO) - Italy
Mail: huber@hubertitalia.com, Telefono: (+39) 0322 967783, P.Iva IT02422800033.