Thermostatic wall mounted sink mixer COMMUNITY_CLT70020

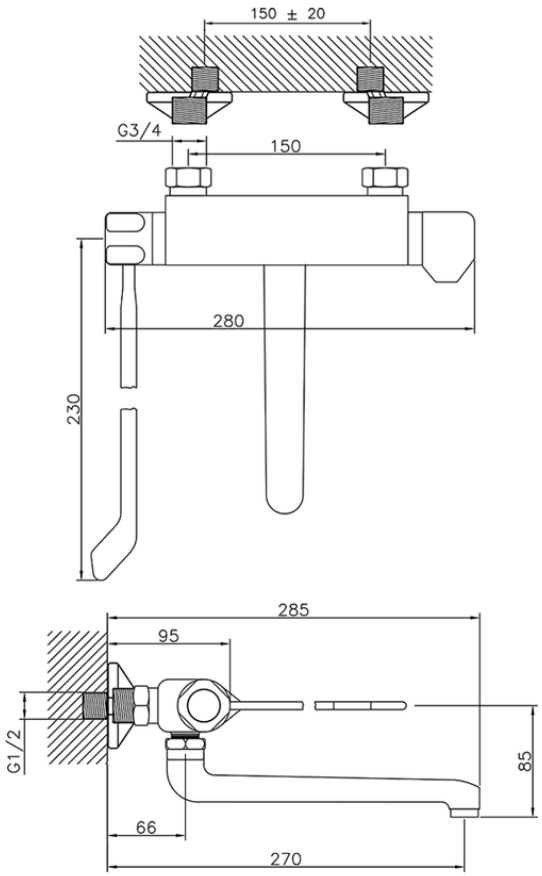

CLT70020 https://en.huberitalia.com/thermostatic-wall-mounted-sink-mixer-community-clt70020

2026-06-26

© 2021 Huber. Via Brughiere, 50. 28017 - San Maurizio (NO) - Italy
Mail: huber@hubertitalia.com, Telefono: (+39) 0322 967783, P.Iva IT02422800033.