Huber
TEL. (+39) 0322 967783
MAIL. huber@huberitalia.com

2-function single lever shower set HARLOCK_HC004030

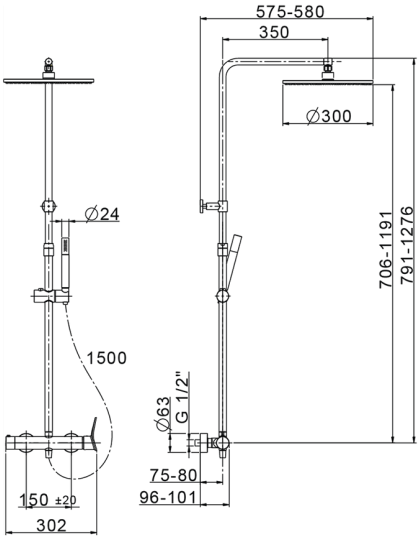

MODEL **HC004030**

2-function single lever shower set,2-outlet deviastop,adjustable riser column,sliding shower bracket,Brass D.24mm minimalistic one spray handshower,300 mm Brass round headshower,150 cm smooth SUPREME flexible hose

AVAILABLE FINISHINGS

21 21 Chrome

40 40 Matt Black

4Q 4Q Matt White

6T 6T Chrome/Matt Black

CHARACTERISTICS

Cartridge Spare Parts **ZZ95409000**

35 mm Cartridge

DeviaStop

The Huber Devia Stop technology allows to adjust the water flow and to direct it to the selected output point (overhead soaker, hand shower, etc).

2026-04-07

© 2021 Huber. Via Brughiere, 50. 28017 - San Maurizio (NO) - Italy
Mail: huber@hubertitalia.com, Telefono: (+39) 0322 967783, P.Iva IT02422800033.