CombiShower with Diverter COLUMNS_SSV86030

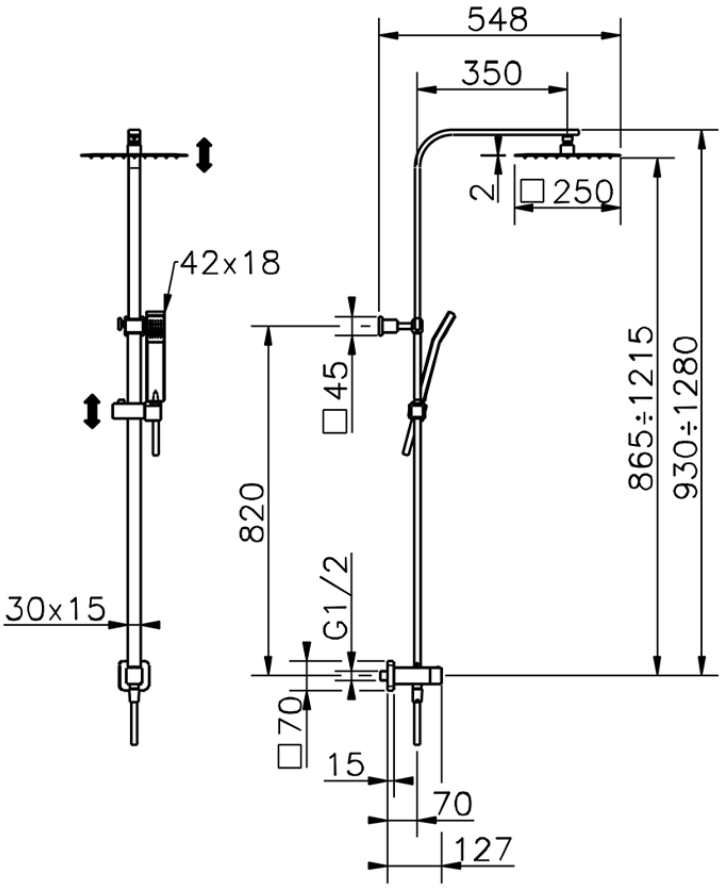

SSV86030

https://en.huberitalia.com/combishower-with-diverter-columns-ssv86030

2026-05-16