# Thermostatic shower mixer with sliding bar VICTORIAN_190R.VT01H.

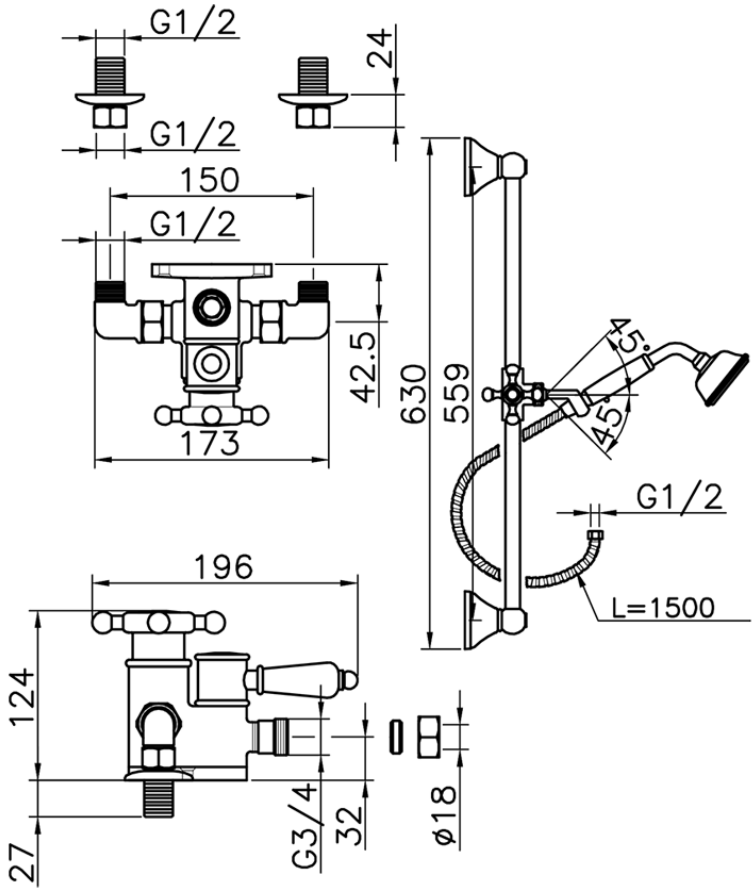


190R.VT01H. https://en.huberitalia.com/thermostatic-shower-mixer-with-sliding-bar-victorian-190r-vt01h

2024-12-31

© 2021 Huber. Via Brughiere, 50. 28017 - San Maurizio (NO) - Italy
Mail: huber@hubertitalia.com, Telefono: (+39) 0322 967783, P.Iva IT02422800033.