Trapezoidal wall-mounted showerhead ZEN_ZS122040

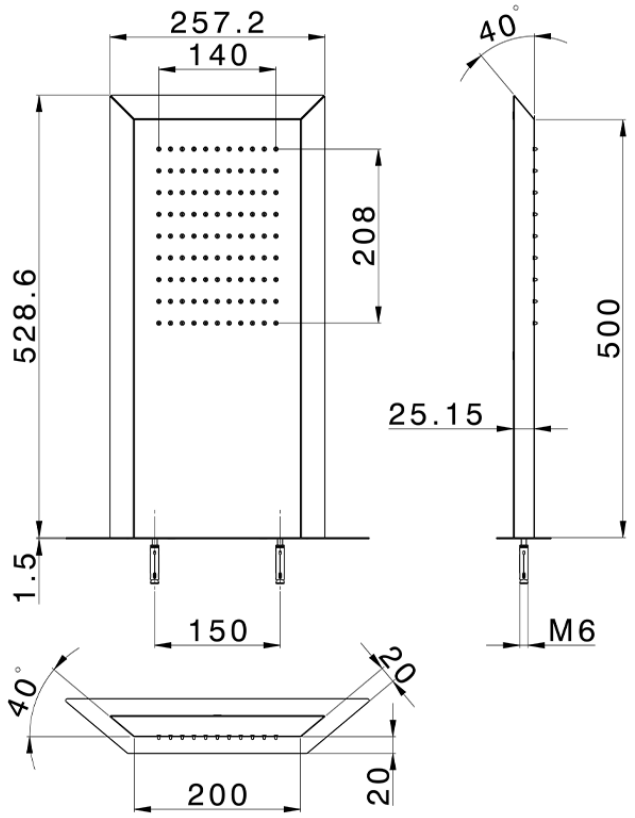

ZS122040

https://en.huberitalia.com/trapezoidal-wall-mounted-showerhead-zen-zs122040

2026-06-06

© 2021 Huber. Via Brughiere, 50. 28017 - San Maurizio (NO) - Italy
Mail: huber@hubertitalia.com, Telefono: (+39) 0322 967783, P.Iva IT02422800033.