2-function Thermostatic shower set COLUMNS_QTC8603H

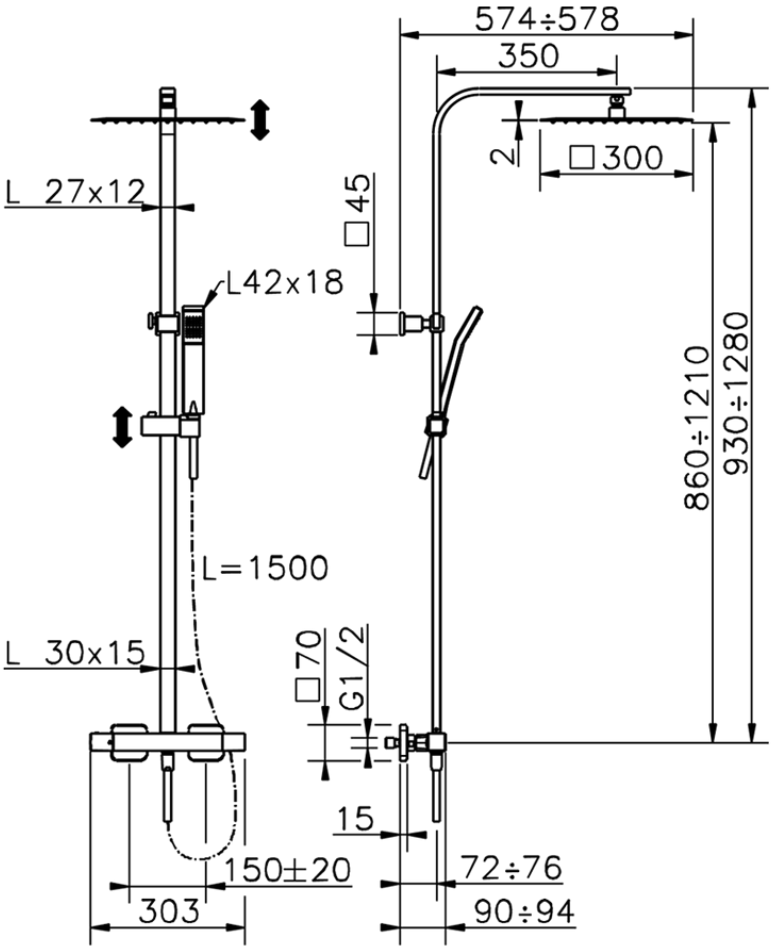

QTC8603H https://en.huberitalia.com/2-function-thermostatic-shower-set-columns-qtc8603h

2026-04-27

© 2021 Huber. Via Brughiere, 50. 28017 - San Maurizio (NO) - Italy
Mail: huber@hubertitalia.com, Telefono: (+39) 0322 967783, P.Iva IT02422800033.