Cover Part for 2 Function Concealed Thermo Valve NUOVA KIRUNA_K201V200

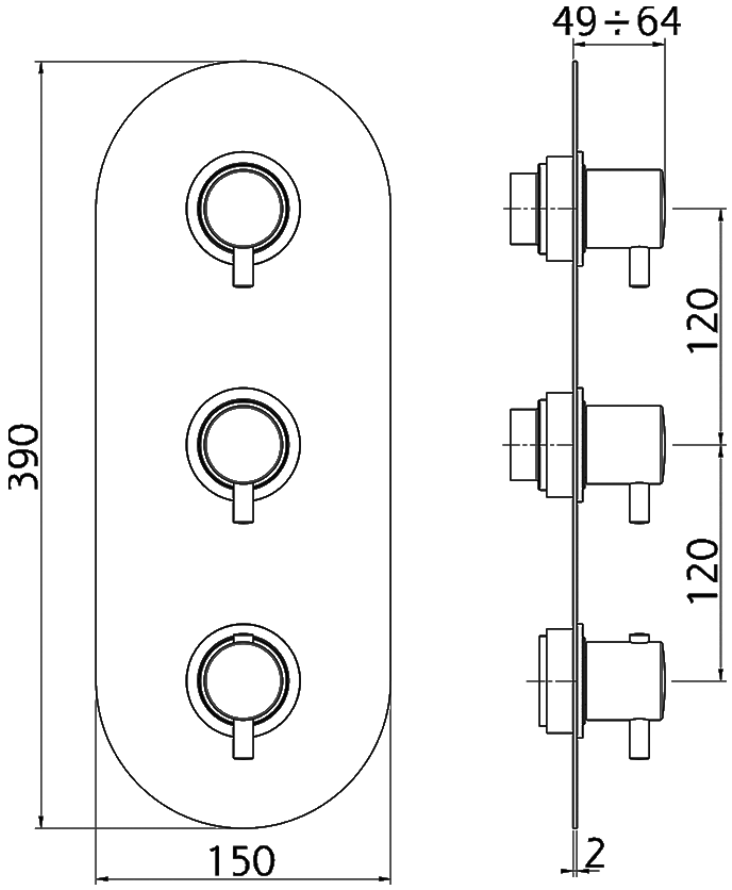

K201V200 https://en.huberitalia.com/cover-part-for-2-function-concealed-thermo-valve-nuova-kiruna-k201v200

© 2021 Huber. Via Brughiere, 50. 28017 - San Maurizio (NO) - Italy
Mail: huber@hubertitalia.com, Telefono: (+39) 0322 967783, P.Iva IT02422800033.

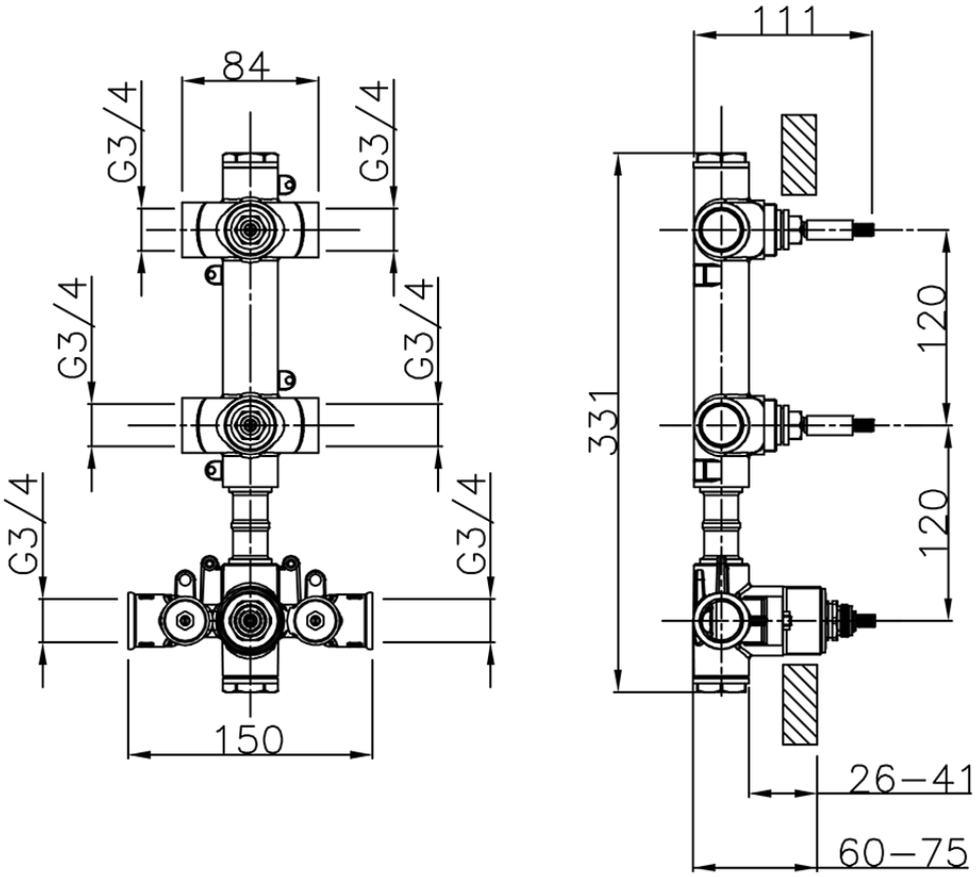

ZB01V200 https://en.huberitalia.com/2-function-concealed-thermostatic-valve-concealed-zb01v200

2026-10-29