Thermostatic shower mixer, with shower set CROISETTE_CSD01010

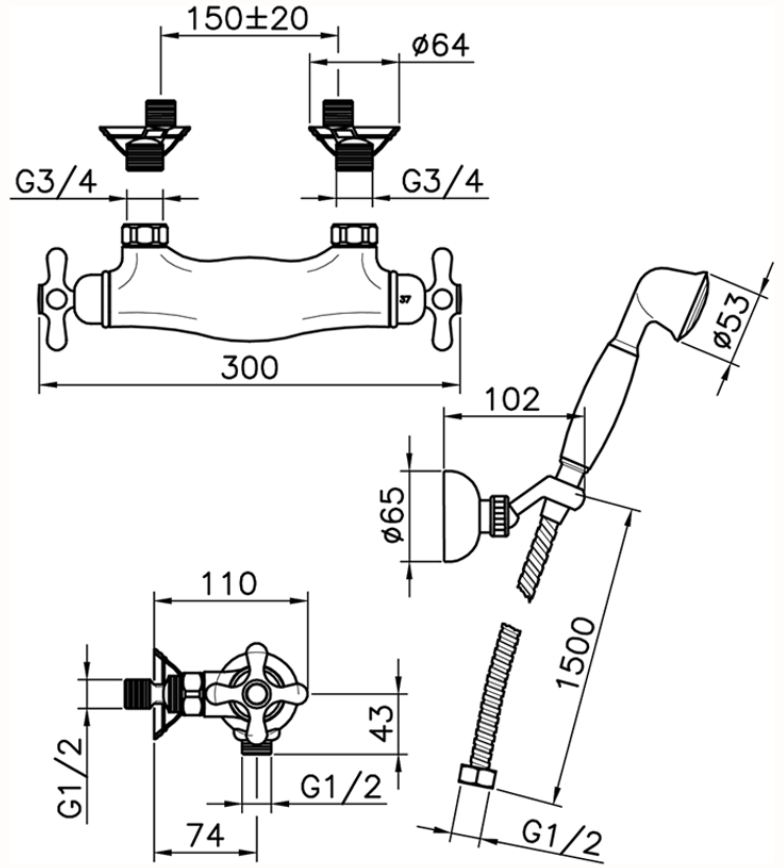

CSD01010 https://en.huberitalia.com/thermostatic-shower-mixer-with-shower-set-croisette-csd01010

2024-12-18

© 2021 Huber. Via Brughiere, 50. 28017 - San Maurizio (NO) - Italy
Mail: huber@hubertitalia.com, Telefono: (+39) 0322 967783, P.Iva IT02422800033.