Lynox showerset LYNOX

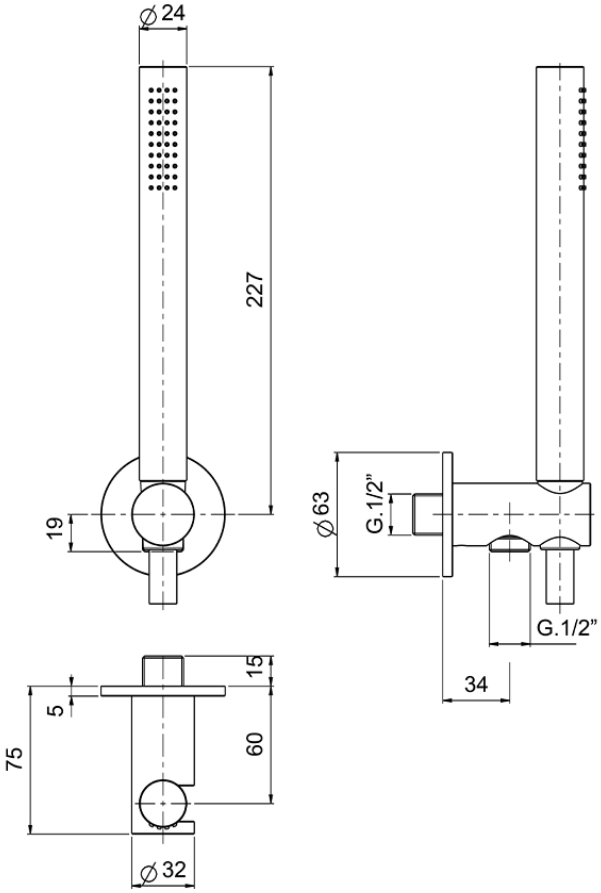

SS018300

https://en.huberitalia.com/lynox-showerset-lynoxss018300

2024-05-08

© 2021 Huber. Via Brughiere, 50. 28017 - San Maurizio (NO) - Italy
Mail: huber@hubertitalia.com, Telefono: (+39) 0322 967783, P.Iva IT02422800033.