Single lever washbasin mixer SATURNO_SN000514

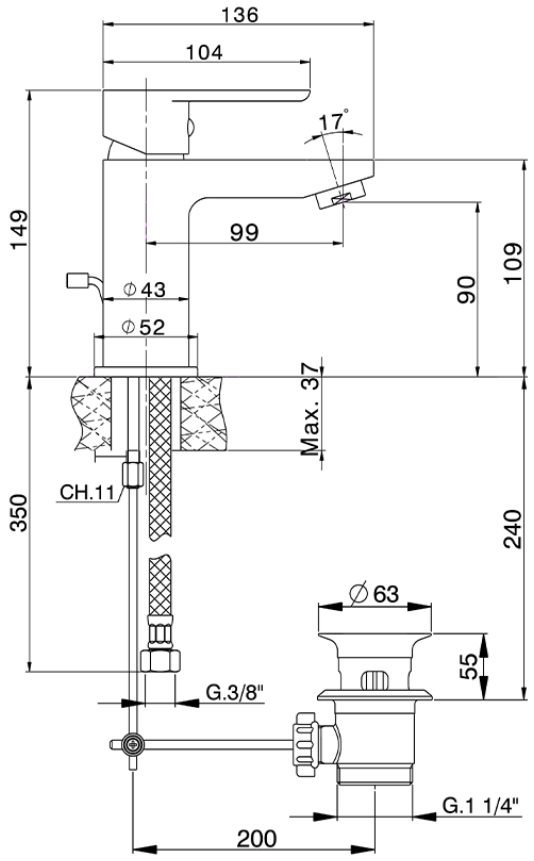

SN000514

https://en.huberitalia.com/single-lever-washbasin-mixer-saturno-sn000514

2026-04-06

© 2021 Huber. Via Brughiere, 50. 28017 - San Maurizio (NO) - Italy
Mail: huber@hubertitalia.com, Telefono: (+39) 0322 967783, P.Iva IT02422800033.