Single lever washbasin mixer SATURNO_SN000514

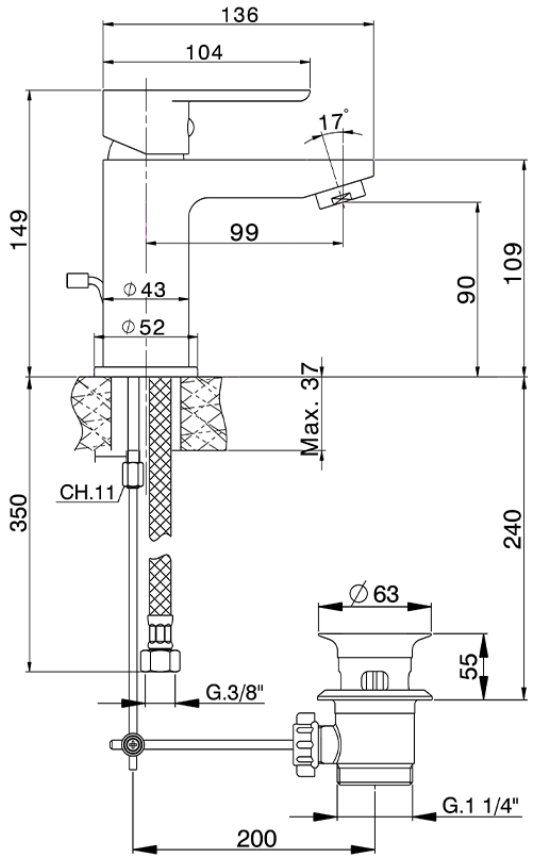

SN000514

https://en.huberitalia.com/single-lever-washbasin-mixer-saturno-sn000514

2026-06-06