3-function Thermostatic shower set COLUMNS_592.VN31H.

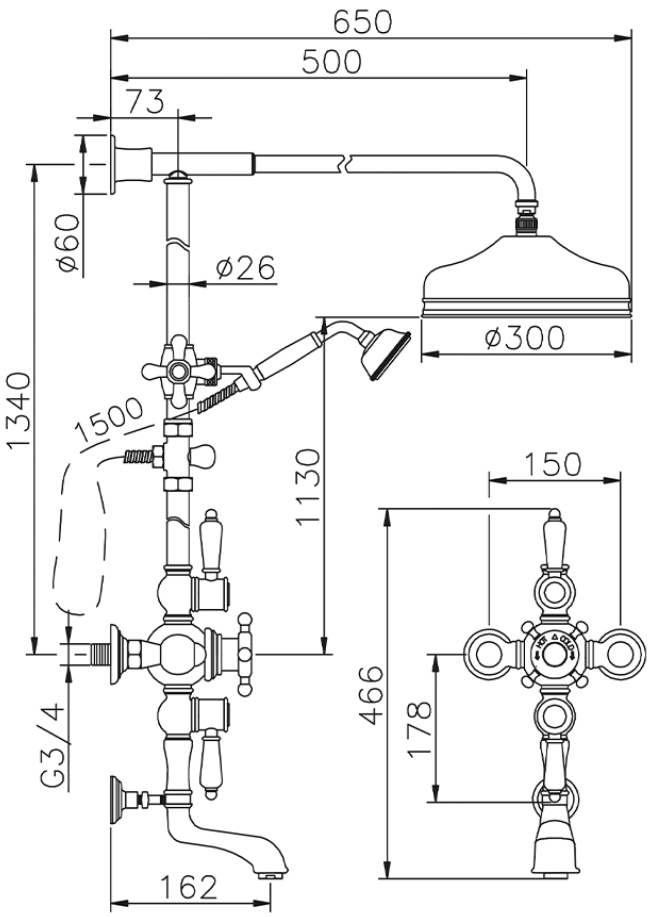

592.VN31H. https://en.huberitalia.com/3-function-thermostatic-shower-set-columns-592-vn31h

2026-04-26

© 2021 Huber. Via Brughiere, 50. 28017 - San Maurizio (NO) - Italy
Mail: huber@hubertitalia.com, Telefono: (+39) 0322 967783, P.Iva IT02422800033.