Shower arm with showerhead SHOWER_SS013650

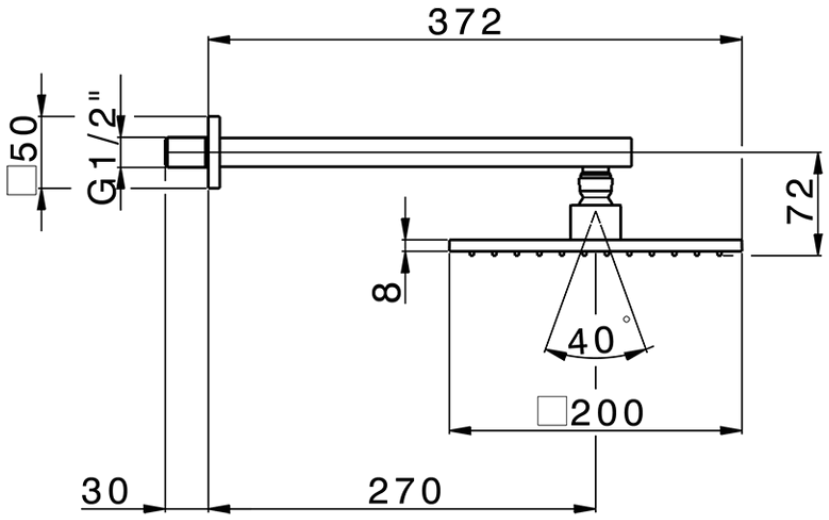

SS013650

https://en.huberitalia.com/shower-arm-with-showerhead-shower-ss013650

2026-06-09