Single lever sink mixer with reclined spout KITCHEN_AY901530

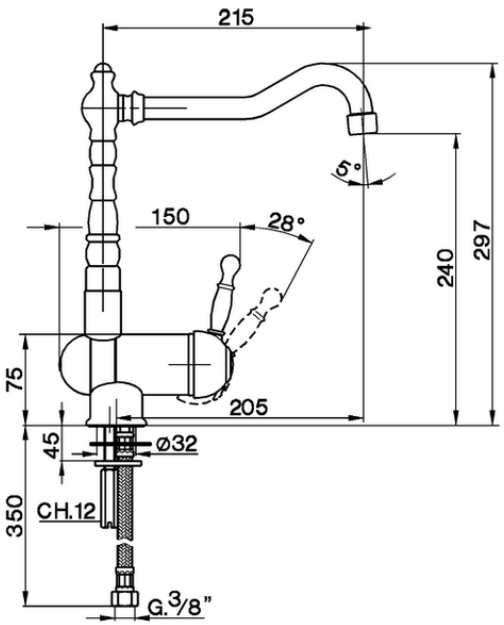

AY901530 https://en.huberitalia.com/single-lever-sink-mixer-with-reclined-spout-kitchen-ay901530

2024-12-04

© 2021 Huber. Via Brughiere, 50. 28017 - San Maurizio (NO) - Italy
Mail: huber@hubertitalia.com, Telefono: (+39) 0322 967783, P.Iva IT02422800033.