Single lever shower mixer DADO_DD000440

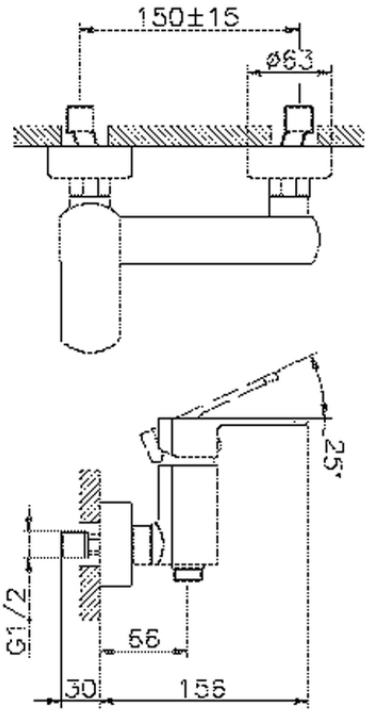

DD000440

https://en.huberitalia.com/single-lever-shower-mixer-dado-dd000440

2026-06-13