Hygienic shower set, complete Inox AISI 304 LYNOX_LX007910

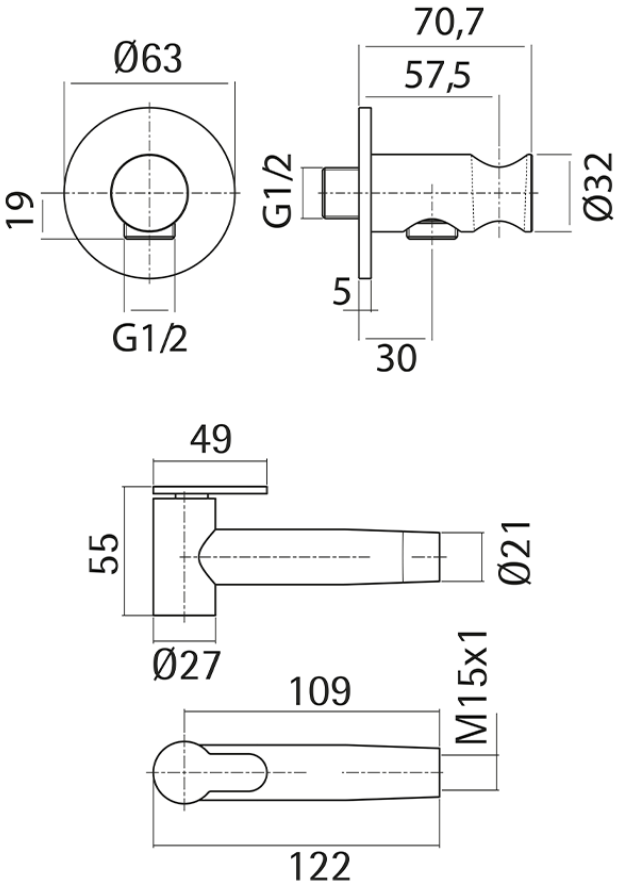

LX007910 https://en.huberitalia.com/hygienic-shower-set-complete-inox-aisi-304-lynox-lx007910

2026-11-24

© 2021 Huber. Via Brughiere, 50. 28017 - San Maurizio (NO) - Italy
Mail: huber@hubertitalia.com, Telefono: (+39) 0322 967783, P.Iva IT02422800033.