Huber
TEL. (+39) 0322 967783
MAIL. huber@huberitalia.com

Hygienic shower set, complete Inox AISI 304 LYNOX_LX007910



MODEL **LX007910**

Hygienic shower set, complete Inox AISI 316L,round wall bracket,Toilet-jet handshower,120 cm Stainless Steel flexible hose

AVAILABLE FINISHINGS

D1 D1 Brushed Inox

CHARACTERISTICS

Toilet-jet handshower

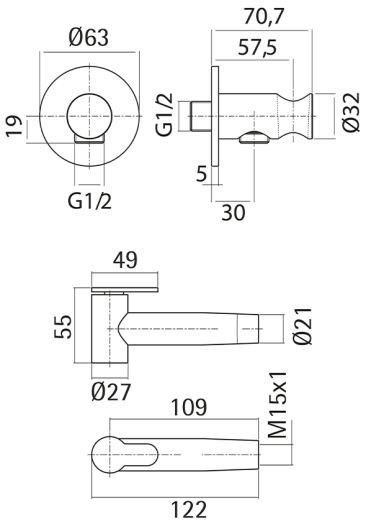

Toilet-jet Handshower

Multi-jets hygienic hand shower, for personal hygiene care.

2026-11-24

© 2021 Huber. Via Brughiere, 50. 28017 - San Maurizio (NO) - Italy
Mail: huber@hubertitalia.com, Telefono: (+39) 0322 967783, P.Iva IT02422800033.