Single lever washbasin mixer EnergySave TRATTO EVO_TV000515

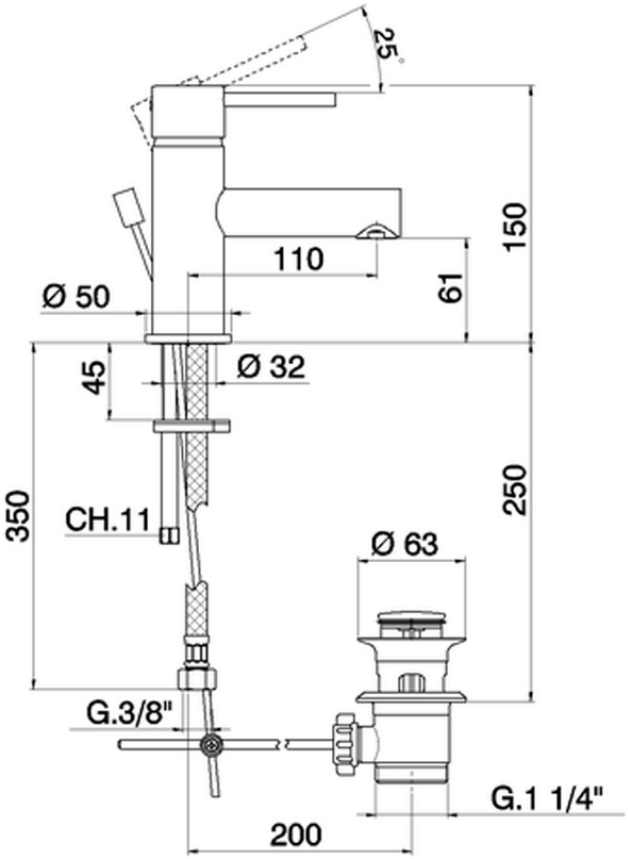

TV000515 https://en.huberitalia.com/single-lever-washbasin-mixer-energysave-tratto-evo-tv000515

2026-06-13

© 2021 Huber. Via Brughiere, 50. 28017 - San Maurizio (NO) - Italy
Mail: huber@hubertitalia.com, Telefono: (+39) 0322 967783, P.Iva IT02422800033.