Huber
TEL. (+39) 0322 967783
MAIL. huber@huberitalia.com

Exposed part for concealed 2-outlet mixer M32_MT002300

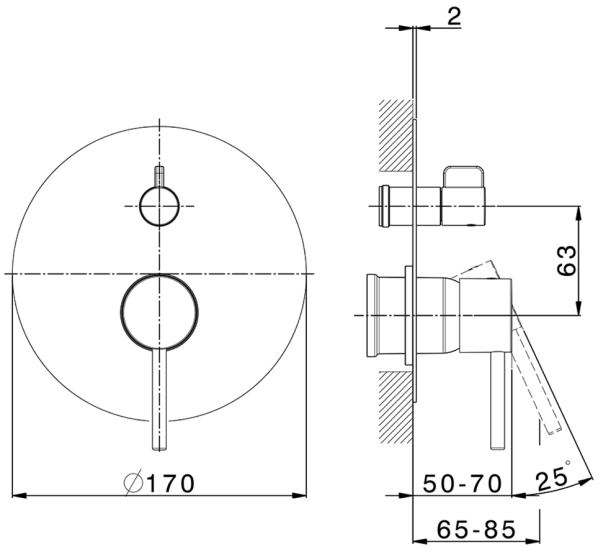

MODEL **MT002300**

Exposed part for concealed 2-outlet mixer,2-Way rotating diverter,without concealed part,for item Easy-Box ZB000230

AVAILABLE FINISHINGS

- **21** 21 Chrome
- **26** 26 Old Copper
- **2F** 2F Brushed Nickel
- **2W** 2W Brushed Gold
- **40** 40 Matt Black
- **4Q** 4Q Matt White

CHARACTERISTICS

Installation	**Concealed**
Required concealed parts	**ZB000230**

© 2021 Huber. Via Brughiere, 50. 28017 - San Maurizio (NO) - Italy
Mail: huber@hubertitalia.com, Telefono: (+39) 0322 967783, P.Iva IT02422800033.

Huber
TEL. (+39) 0322 967783
MAIL. huber@huberitalia.com

Concealed single lever bath-shower mixer Easy-Box CONCEALED_ZB000230

MODEL **ZB000230**

Concealed single lever bath-shower mixer Easy-Box,2-Way rotating diverter,without trim kit,with protection guard box

AVAILABLE FINISHINGS

04 04 Without finishing

CHARACTERISTICS

Installation	**Concealed**
Cartridge Spare Parts	**ZZ92909000**
35 mm Cartridge	
Concealed	**1**

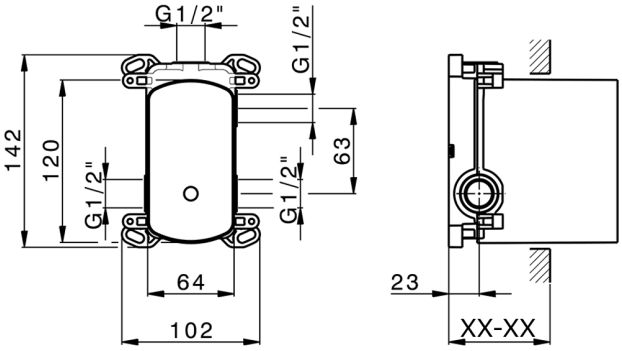

Piastra/Plate/Plaque/Platte/Placa
2-3mm: XX 65-85
10mm: XX 60-80

2026-01-11

© 2021 Huber. Via Brughiere, 50. 28017 - San Maurizio (NO) - Italy
Mail: huber@hubertitalia.com, Telefono: (+39) 0322 967783, P.Iva IT02422800033.