Thermostatic deck-mounted 4-hole mixer CROISETTE_CST76010

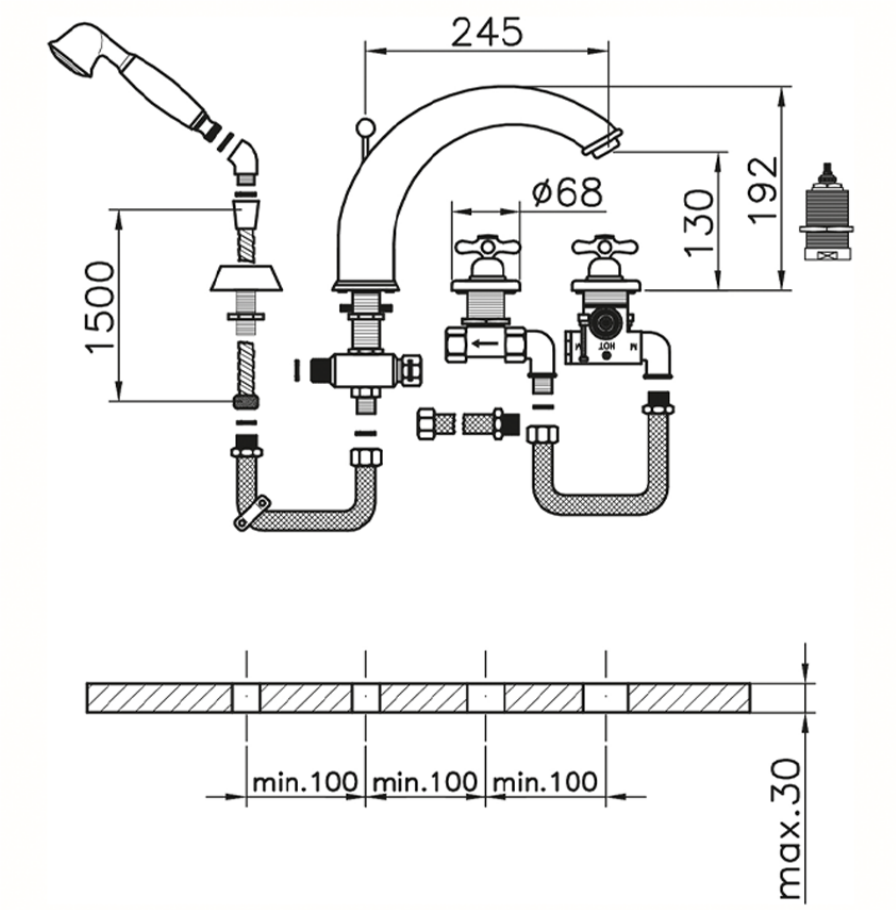

CST76010 https://en.huberitalia.com/thermostatic-deck-mounted-4-hole-mixer-croisette-cst76010

2026-02-03

© 2021 Huber. Via Brughiere, 50. 28017 - San Maurizio (NO) - Italy
Mail: huber@hubertitalia.com, Telefono: (+39) 0322 967783, P.Iva IT02422800033.