Concealed single lever bath mixer LYNOX_LX001101

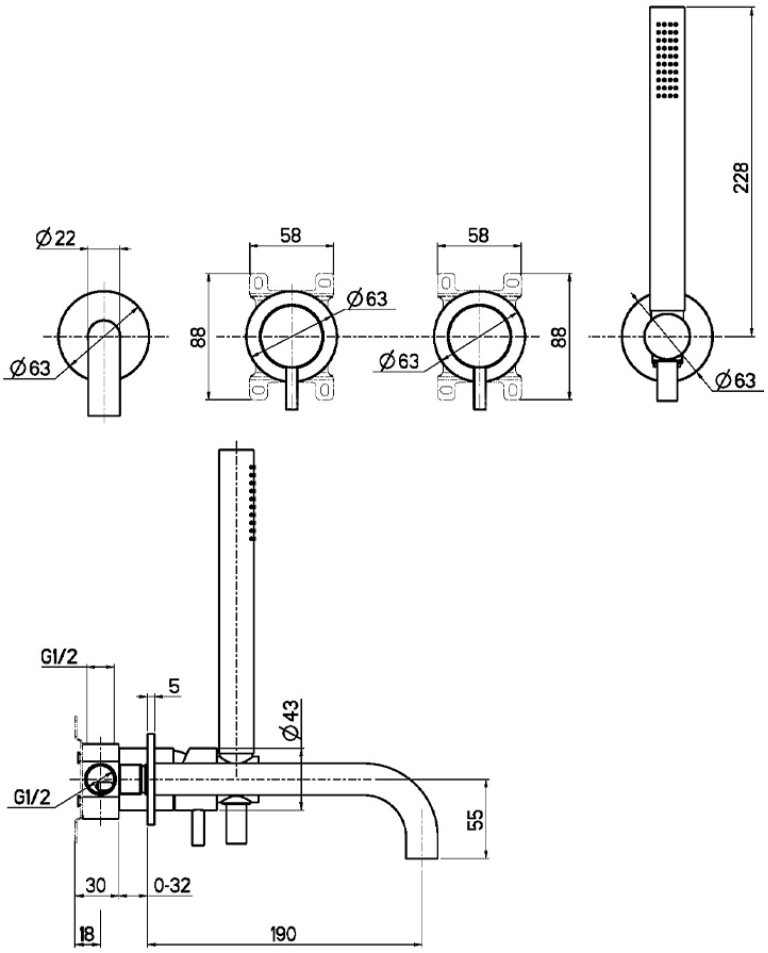

LX001101

https://en.huberitalia.com/concealed-single-lever-bath-mixer-lynox-lx001101

2026-06-26

© 2021 Huber. Via Brughiere, 50. 28017 - San Maurizio (NO) - Italy
Mail: huber@hubertitalia.com, Telefono: (+39) 0322 967783, P.Iva IT02422800033.