Huber
TEL. (+39) 0322 967783
MAIL. huber@huberitalia.com

Exposed part for 3-outlet con.thermo.shower valve THERMO_SU018200

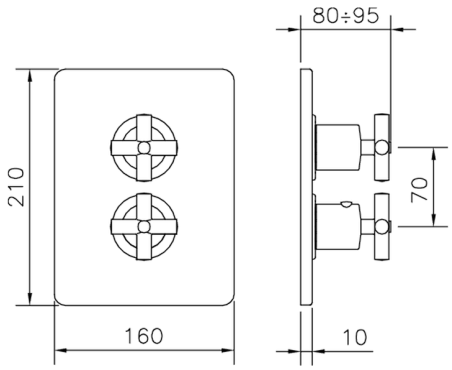

MODEL **SU018200**

Exposed part for 3-outlet thermostatic mixer,with 3 outlet diverter,without concealed part,for item ZB018201

AVAILABLE FINISHINGS

21 21 Chrome

40 40 Matt Black

2F 2F Brushed Nickel

2W 2W Brushed Gold

CHARACTERISTICS

Installation	**Concealed**
Required concealed parts	**ZB018201**

Thermostatic

The Huber thermostatic is your personal water manager, helping you to handle, control and save water and energy.

© 2021 Huber. Via Brughiere, 50. 28017 - San Maurizio (NO) - Italy
Mail: huber@hubertitalia.com, Telefono: (+39) 0322 967783, P.Iva IT02422800033.

Huber
TEL. (+39) 0322 967783
MAIL. huber@huberitalia.com

3-outlet Concealed thermostatic shower valve CONCEALED_ZB018201

MODEL **ZB018201**

3-Outlet Concealed thermostatic mixer,with 3-outlet diverter,without trim kit

AVAILABLE FINISHINGS

04 04 Without finishing

CHARACTERISTICS

Installation	**Concealed**
Cartridge Spare Parts	**24.04A.PP**
8x20 Plus P Thermostatic Valve	
Concealed	**1**

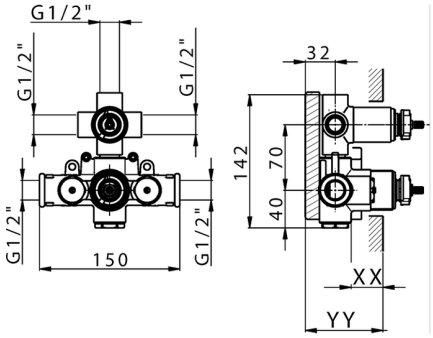

Piastra/Plate/Plaque/Platte/Placa
2-3mm: XX 25-40 YY 76-91
10 mm: XX 16-31 YY 65-80

DeviaStop

The Huber Devia Stop technology allows to adjust the water flow and to direct it to the selected output point (overhead soaker, hand shower, etc).

Thermostatic

The Huber thermostatic is your personal water manager, helping you to handle, control and save water and energy.

2026-02-03

© 2021 Huber. Via Brughiere, 50. 28017 - San Maurizio (NO) - Italy
Mail: huber@hubertitalia.com, Telefono: (+39) 0322 967783, P.Iva IT02422800033.