Thermostatic floor-mounted bath mixer VICTORIAN_VTT39010

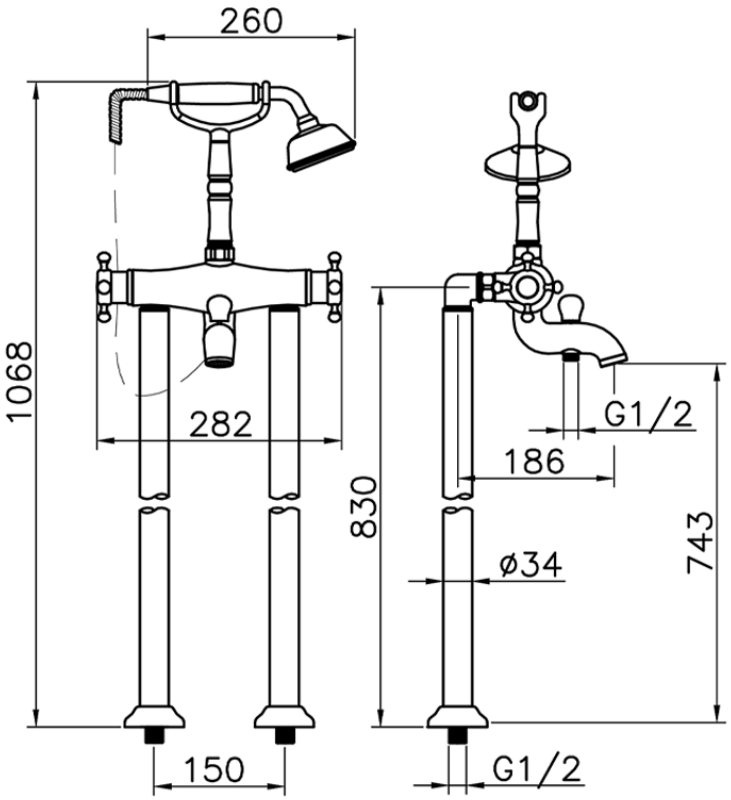

VTT39010 https://en.huberitalia.com/thermostatic-floor-mounted-bath-mixer-victorian-vtt39010

2026-10-28

© 2021 Huber. Via Brughiere, 50. 28017 - San Maurizio (NO) - Italy
Mail: huber@hubertitalia.com, Telefono: (+39) 0322 967783, P.Iva IT02422800033.