2-holes Sink mixer EVA_EV000600

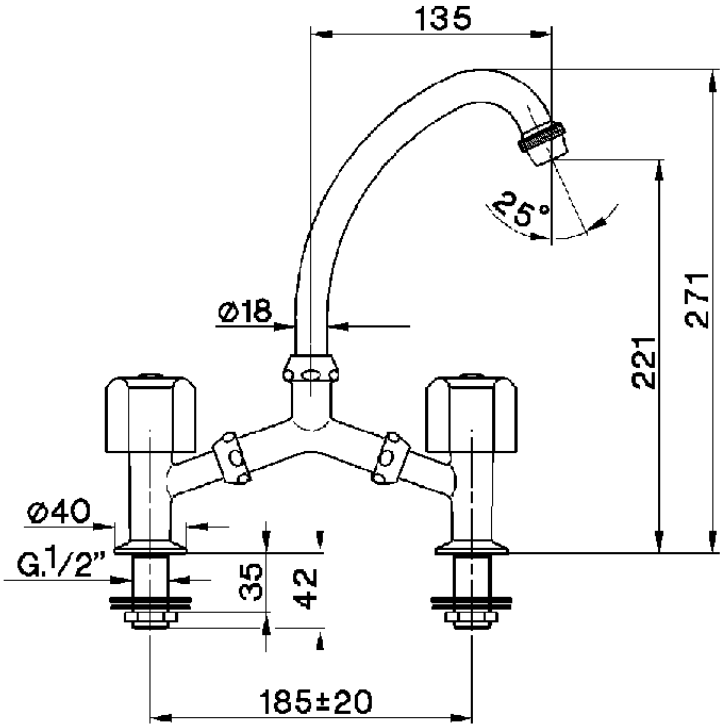

EV000600

https://en.huberitalia.com/2-holes-sink-mixer-eva-ev000600

2026-04-05

© 2021 Huber. Via Brughiere, 50. 28017 - San Maurizio (NO) - Italy
Mail: huber@hubertitalia.com, Telefono: (+39) 0322 967783, P.Iva IT02422800033.