Thermostatic shower mixer with sliding bar NUOVA EGO_NES01010

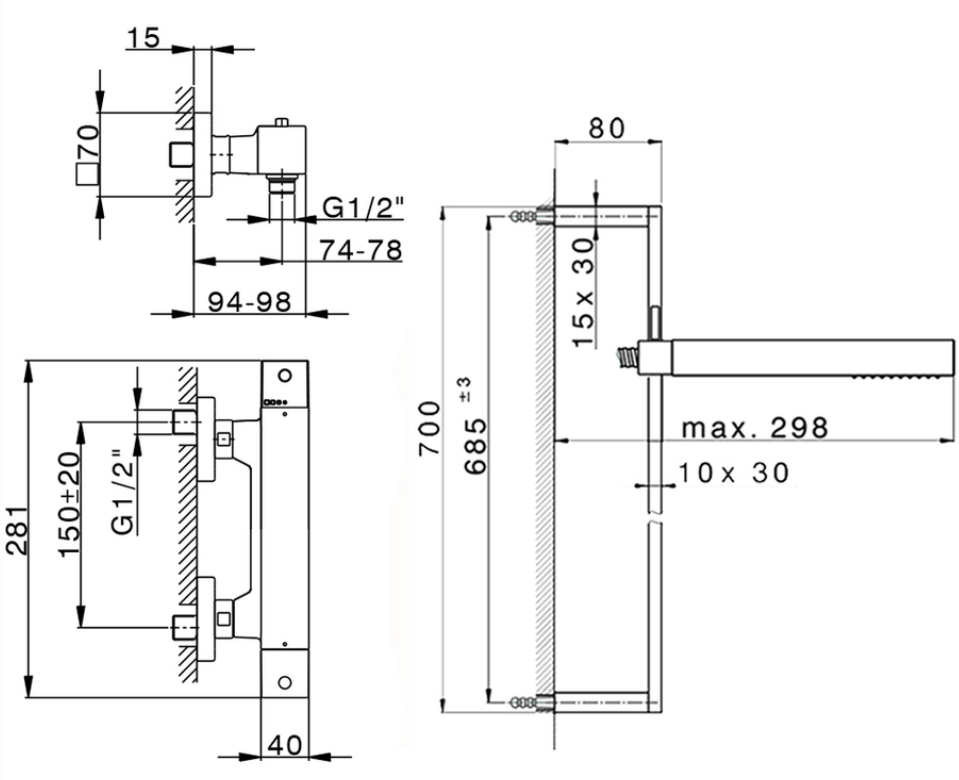

NES01010 https://en.huberitalia.com/thermostatic-shower-mixer-with-sliding-bar-nuova-ego-nes01010

2026-11-24

© 2021 Huber. Via Brughiere, 50. 28017 - San Maurizio (NO) - Italy
Mail: huber@hubertitalia.com, Telefono: (+39) 0322 967783, P.Iva IT02422800033.