Huber
TEL. (+39) 0322 967783
MAIL. huber@huberitalia.com

Thermostatic shower mixer with sliding bar NUOVA EGO_NES01010

MODEL **NES01010**

Thermostatic shower mixer with sliding bar,70 cm sliding rail bar with sliding bracket,ABS 27x27mm one spray minimalist square handshower,150 cm smooth SILVERFLEX Flexible Hose

AVAILABLE FINISHINGS

21 21 Chrome

2F 2F Brushed Nickel

40 40 Matt Black

4Q 4Q Matt White

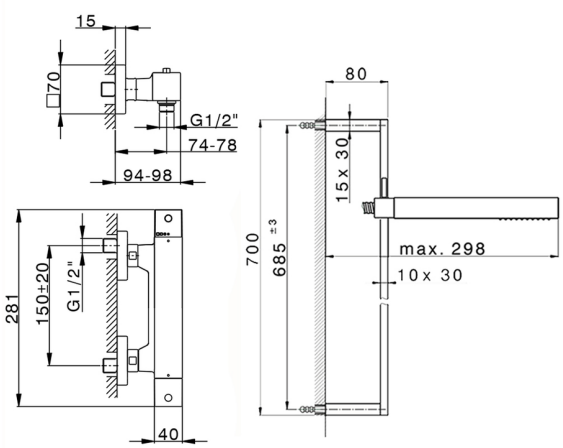

CHARACTERISTICS

Cartridge Spare Parts **22.04A.AR - ZZ97279004**

Argo 2 (long filter) Thermostatic Valve

SafeTouch

The Huber SafeTouch system maintains the mixer body cool to the touch during operation.

Thermostatic

The Huber thermostatic is your personal water manager, helping you to handle, control and save water and energy.

2026-02-04

© 2021 Huber. Via Brughiere, 50. 28017 - San Maurizio (NO) - Italy
Mail: huber@hubertitalia.com, Telefono: (+39) 0322 967783, P.Iva IT02422800033.