Single lever bath mixer, shower set NUOVA KIRUNA_K2000120

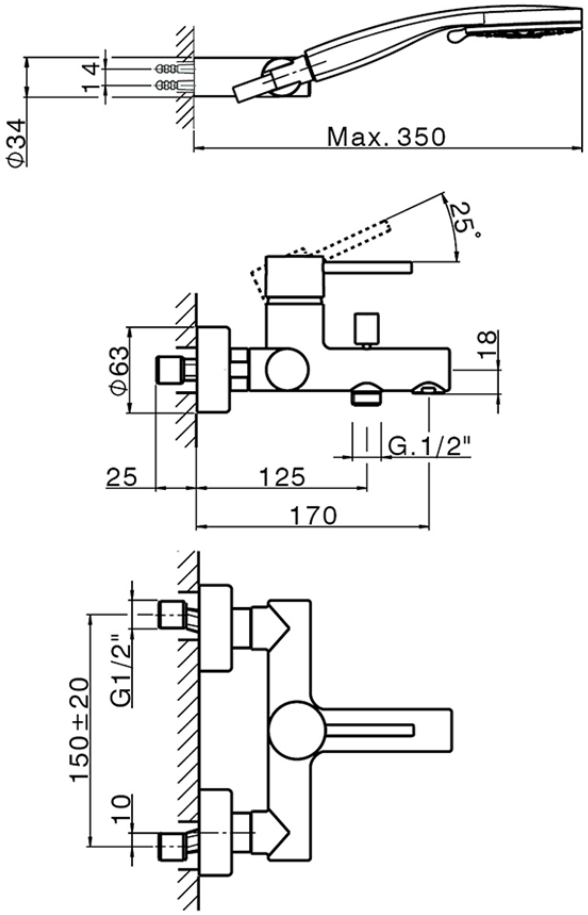

K2000120 https://en.huberitalia.com/single-lever-bath-mixer-shower-set-nuova-kiruna-k2000120

2026-10-28