Single lever washbasin mixer CROISETTE_CM000510

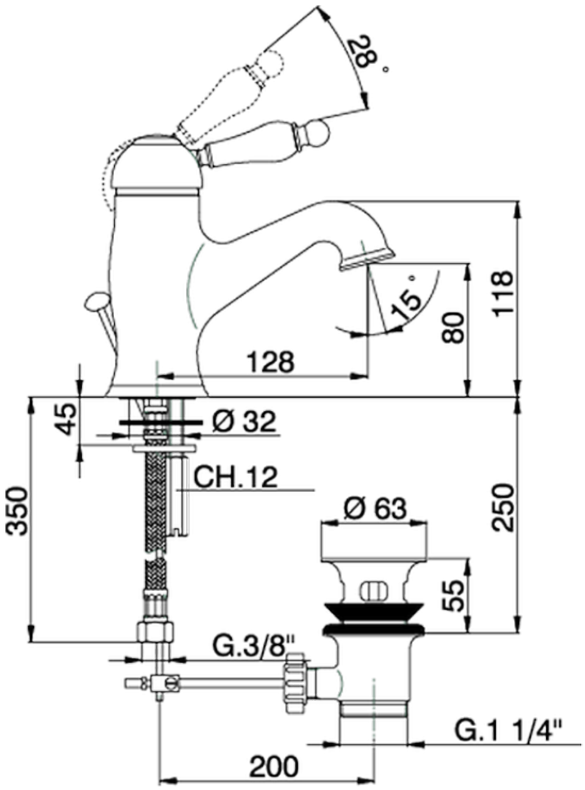

CM000510

https://en.huberitalia.com/single-lever-washbasin-mixer-croisette-cm000510

2026-04-05