2-functions Thermostatic shower set DADO

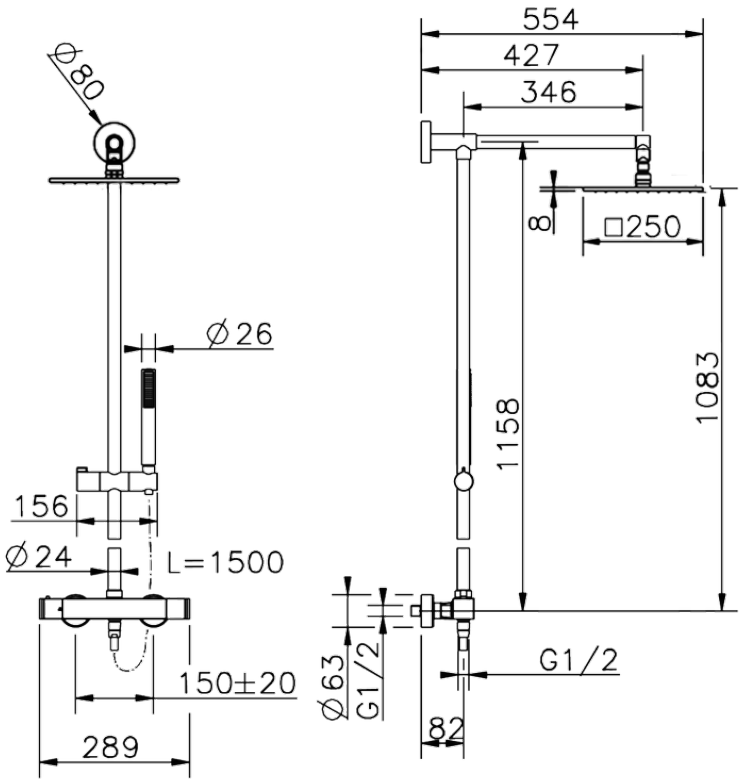

DDC78010

https://en.huberitalia.com/2-functions-thermostatic-shower-set-dadoddc78010

2024-05-02

© 2021 Huber. Via Brughiere, 50. 28017 - San Maurizio (NO) - Italy
Mail: huber@hubertitalia.com, Telefono: (+39) 0322 967783, P.Iva IT02422800033.