Huber
TEL. (+39) 0322 967783
MAIL. huber@huberitalia.com

370x370 mm Chromotherapy Ceiling showerhead ZEN_ZS1C0195

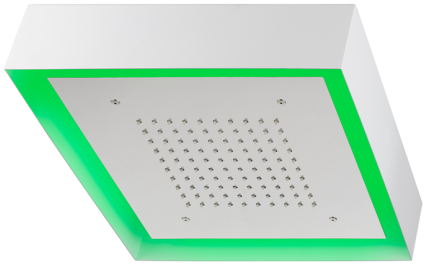

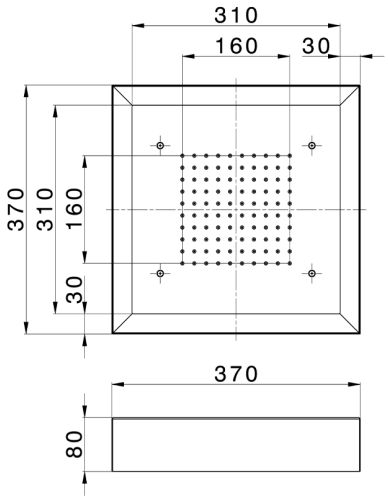

MODEL **ZS1C0195**

370x370 mm Chromotherapy Ceiling showerhead,with white cover,rain, chromotherapy functions,built-in control included,Stainless Steel AISI 304

AVAILABLE FINISHINGS

D1 D1 Brushed Inox

40 40 Matt Black

4Q 4Q Matt White

D2 D2 Polished Inox

CHARACTERISTICS

2026-06-10

© 2021 Huber. Via Brughiere, 50. 28017 - San Maurizio (NO) - Italy
Mail: huber@hubertitalia.com, Telefono: (+39) 0322 967783, P.Iva IT02422800033.