2-function single lever shower set H2_H2004033

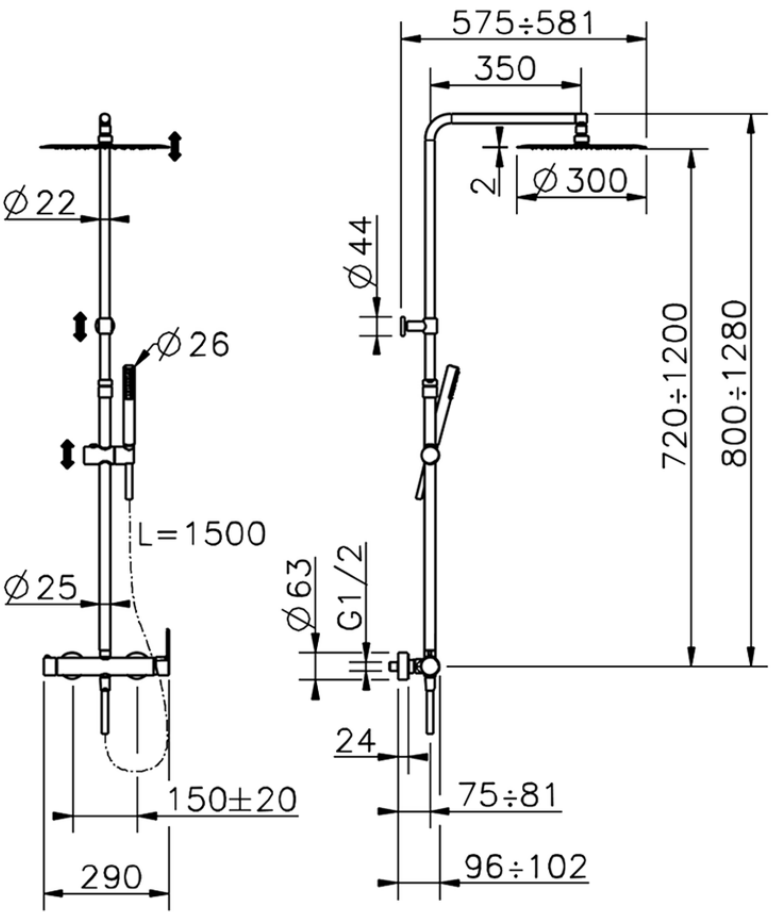

H2004033

https://en.huberitalia.com/2-function-single-lever-shower-set-h2-h2004033

2026-05-02

© 2021 Huber. Via Brughiere, 50. 28017 - San Maurizio (NO) - Italy
Mail: huber@hubertitalia.com, Telefono: (+39) 0322 967783, P.Iva IT02422800033.